DWG. NO.	SHEET	REV
150-ST-FN	1	B

REVISIONS			
REV	DESCRIPTION	DATE	APPROVED
A	CONVERT TO BTG FORMAT	10-25-05	
B	ADD HANDLE, EXTEND FREQ TO 3GHz ECO:15496/DMD	9-26-14	D. Downing

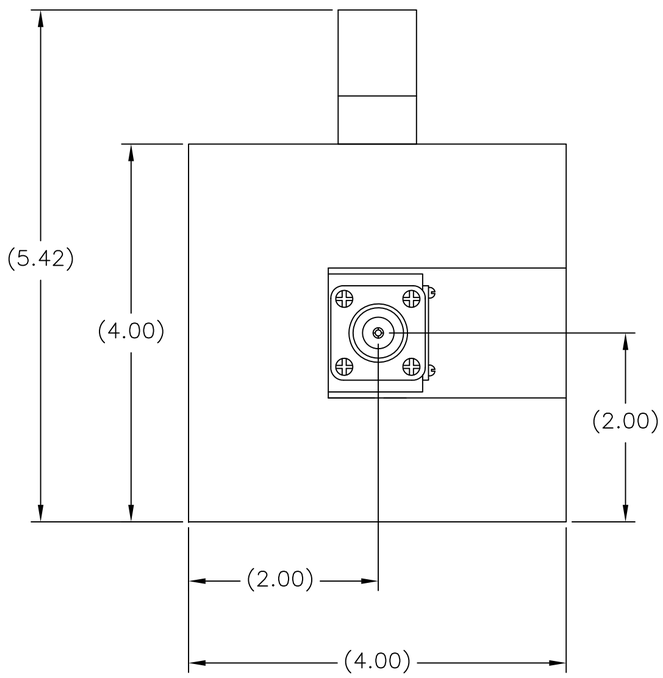

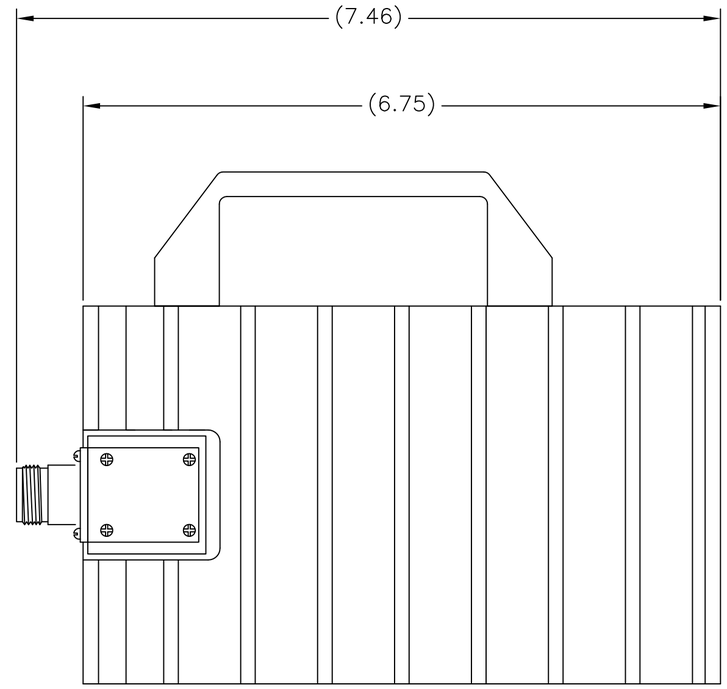

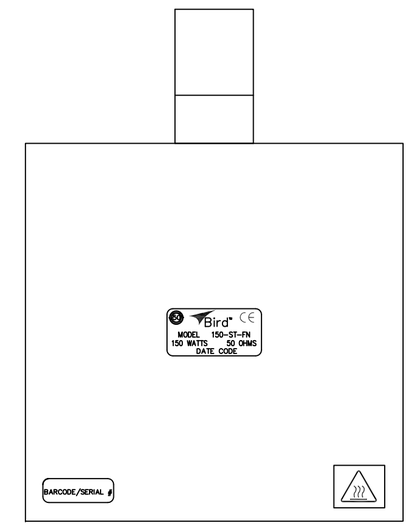

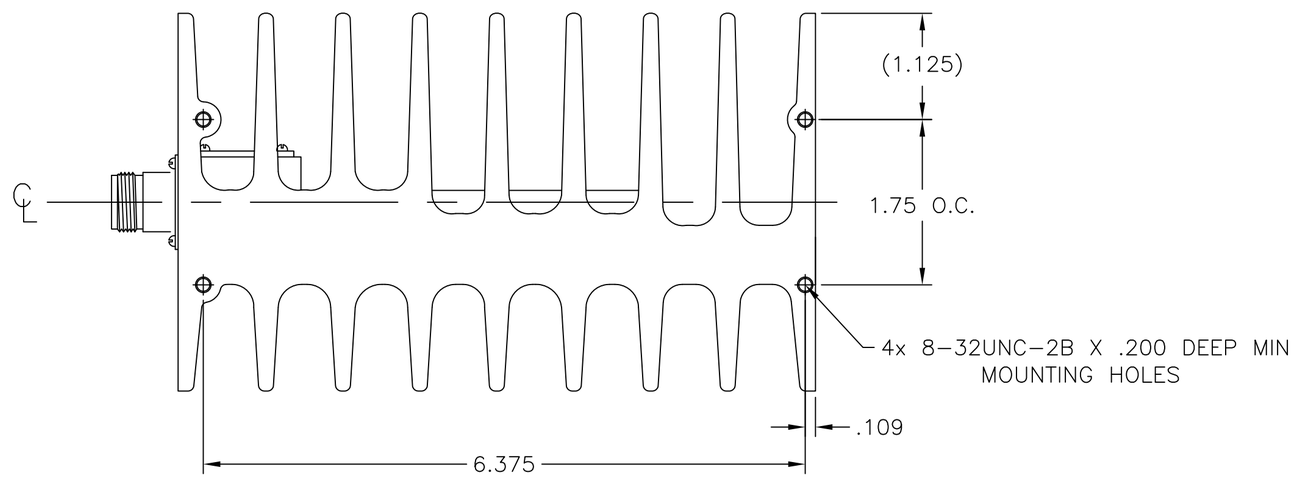

SPECIFICATIONS:
IMPEDANCE: 50 OHMS NOMINAL
POWER RATING: 150 CW AT 40°C
180 CW AT 25°C
FREQUENCY RANGE & VSWR:
DC TO 1 GHz AT 1.10:1 MAX.
1 GHz TO 3 GHz AT 1.25:1 MAX.
CONNECTOR: N-TYPE FEMALE
OPERATING POSITION: ANY
AMBIENT TEMPERATURE: -45°C TO +40°C
OPERATING TEMERATURE: -45°C TO +120°C
HUMIDITY: 95% NON-CONDENSED
NOMINAL SIZE: APPROX 7.46" L X 4.00" W X 5.42" H
WEIGHT: APPROX. 5.0 LBS

MATERIALS: ALL RoHS COMPLIANT
CONNECTOR BODY: BRASS
HOUSING/COVER: ALUMINUM
COOLING FIN: ALUMINUM
CONTACT: BRASS OR BERYLLIUM COPPER
INSULATOR: TEFLON (PTFE)
FINISH: ALL RoHS COMPLIANT
BODY/HOUSING/COVER: TRI-METAL
COOLING FIN: BLACK ANODIZE
CONTACT: SILVER OR GOLD PLATED

UNLESS OTHERWISE SPECIFIED DIMENSIONS ARE IN INCHES
TOLERANCES ARE:
FRACTIONS ±1/64 DECIMALS .XX= ±.010 .XXX= ±.005
ANGLES ±30' MILLIMETERS .X= ±.4 .XX= ±.12
DO NOT SCALE DRAWING

THIS DRAWING IS THE PROPERTY OF THE BIRD TECHNOLOGIES GROUP OR BIRD ELECTRONIC CORPORATION. THE DESIGNS AND SPECIFICATIONS DISCLOSED HEREON ARE PROPRIETARY AND SHALL NOT BE REPRODUCED, NOR COPIED, NOR USED AS THE BASIS FOR THE MANUFACTURE OR SALE OF APPARATUS OR DEVICES WITHOUT THEIR EXPRESS WRITTEN CONSENT.

APPROVALS		DATE
DRN	DMD	12-11-97
CHK		
APP		
MATERIAL	CODE	
FINISH	CODE	

Bird Technologies

TITLE TERMINATION, CONVECTION COOLED, N-TYPE FEMALE, DC-3GHz, 150W

C	FSCM NO. 70998	SCALE 1:1	DWG. NO. 150-ST-FN	REV B
PROJ./LIB AUTOCAD		COMM CODE LD1	SHEET 1 OF 1	