REVISIONS		DWG. NO. 4240–377–20 OL	SHEET 1	REV A
REV	DESCRIPTION	DATE	APPROVED	
A	RELEASE	1–26–21		

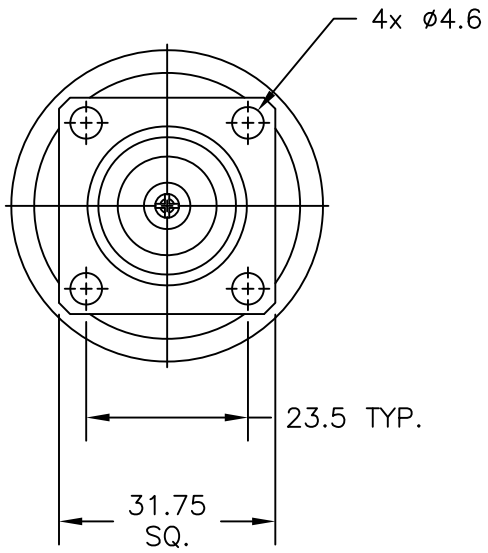

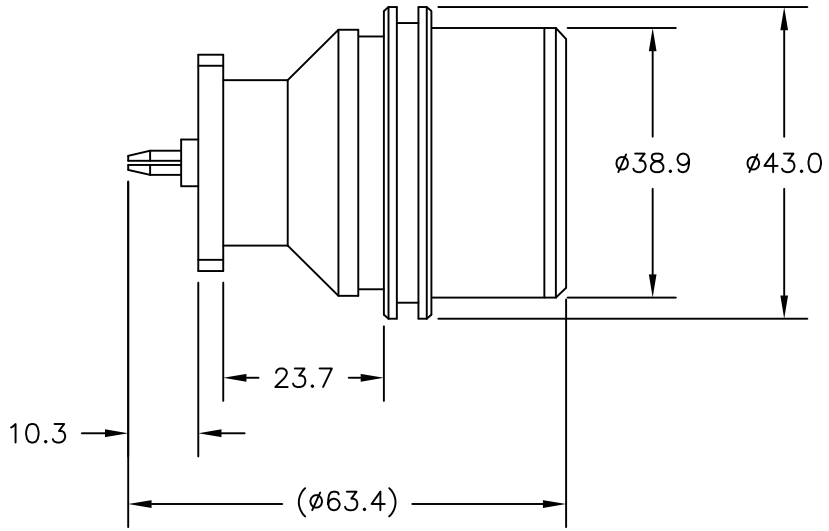

MATERIAL:
BODY: BRASS
INSULATOR: TEFLON
CONTACT: BRASS

FINISH:
BODY: NICKEL PLATED
INSULATOR: NONE
CONTACT: GOLD PLATED

UNLESS OTHERWISE SPECIFIED DIMENSIONS ARE IN INCHES
TOLERANCES ARE:
FRACTIONS ±1/64 DECIMALS .XX= ±.010 .XXX= ±.005
ANGLES ±30' MILLIMETERS .X= ±.4 .XX= ±.12
DO NOT SCALE DRAWING

APPROVALS		DATE
DRN	H. STAMPER	1–26–21
CHK		
APP		

THIS DRAWING IS THE PROPERTY OF THE BIRD TECHNOLOGIES GROUP OR BIRD ELECTRONIC CORPORATION. THE DESIGNS AND SPECIFICATIONS DISCLOSED HEREON ARE PROPRIETARY AND SHALL NOT BE REPRODUCED, NOR COPIED, NOR USED AS THE BASIS FOR THE MANUFACTURE OR SALE OF APPARATUS OR DEVICES WITHOUT THEIR EXPRESS WRITTEN CONSENT.

MATERIAL: SEE NOTES — CODE:
FINISH: SEE NOTES — CODE:

Bird®

TITLE: CONNECTOR, QC – GQL (MALE PLUG)

A	FSCM NO. 70998	SCALE ---	DWG. NO. 4240–377–20 OL	REV A
PROJ./LIB AUTOCAD			SHEET 1 OF 1	